REV.	ECN NO.	MODIFY MATTER	DATE	APPROVED
A		RELEASE TO PRODUCTION		

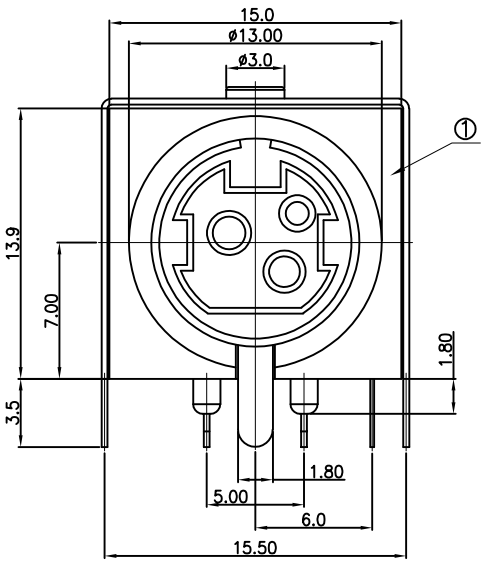

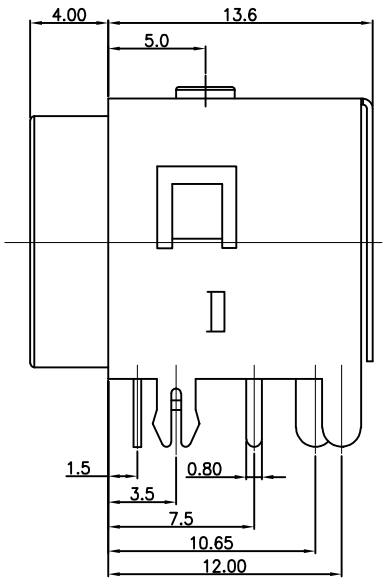

NOTES:

1.ELECTRIC CHARACTERISTICS:
- 1-1.CONTACT CURRENT RATING: 7.5A.;
- 1-2.CONTACT VOLTAGE RATING: 12V DC;
- 1-3.CONTACT RESISTANCE: 30mΩ MAX.;
- 1-4.DIELECTRIC WITHSTANDING VOLTAGE: 500V AC;
- 1-5.INSULATION RESISTANCE: 100 MΩ MIN. AT DC 500V.

2.MECHANICAL CHARACTERISTICS:
- 2-1.DURABILITY: 1000 CYCLES.
- 2-2.INSERTION AND EXTRACTION FORCE:
- 2-2.1. INSERTION FORCE: 44.1N MAX.
- 2-2.2. EXTRACTION FORCE: 4.9N~29.4N.

3.ENVIRENMENT CHARACTERISTICS:
- 3-1.OPERATING TEMPERATURE.-25℃~+85℃.
- 3-2.HUMIDTY:45-85% RH.

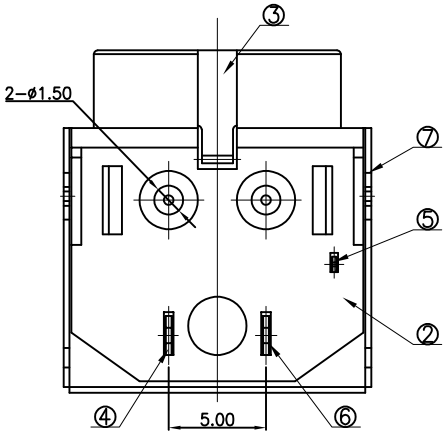

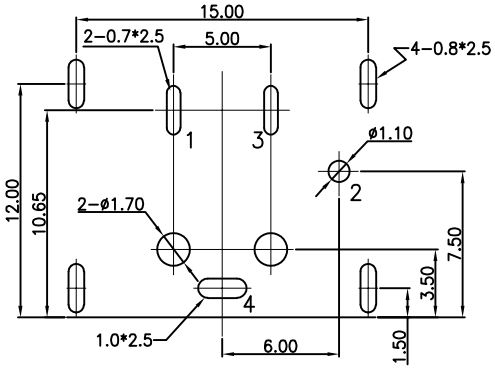

Recommend PCB Layout Thickness:1.6mm
PCB Top View Tolerance: ±0.05mm

Schematic

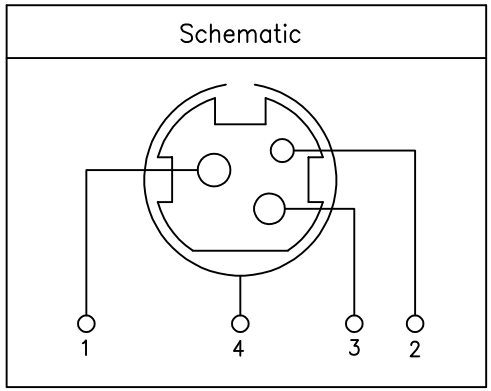

EAST-311R2-1X

颜色:
G:绿色
P:紫色
B:黑色

TOLERANCES UNLESS OTHERWISE SPECIFIED:		COSTOMER COPY	深圳市东方御业科技有限公司 WWW.DFYYCONN.COM TEL:0755-27155560		
X.	---				
X.X	± 0.38	DRAWN: CHENLEI	2017/09/10	TITAL: MINI DIN SOCKET (RoHS)	
X.XX	± 0.25	CHECKED: CHENLEI	2017/09/10	PART NO: EAST-311R2-1X	
X.XXX	± 0.10	APPROVED: QINKAIXING	2017/09/10	UNIT: mm	SCALE: N/A / SHEEL.: 1:1 / REV.
Angle	±1°				

THESE DRAWING AND SPCIFICATION ARE THE PROPERTY OF Shenzhen Dongfangyuye ELECTRONIC CO., LTD.. SHALL NOT BE REPRODUCED.