REV.	ECN NO.	MODIFY MATTER	DATE	APPROVED
A		RELEASE TO PRODUCTION		

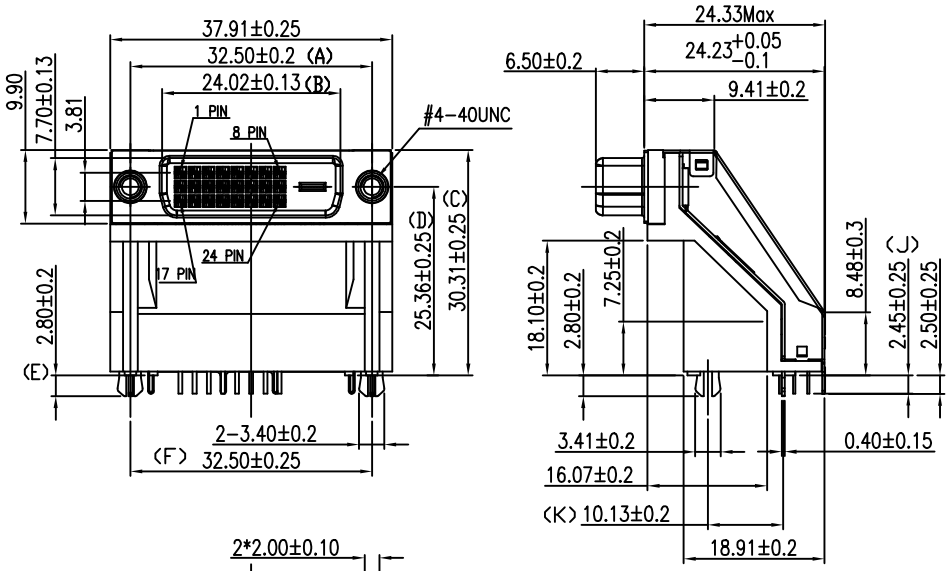

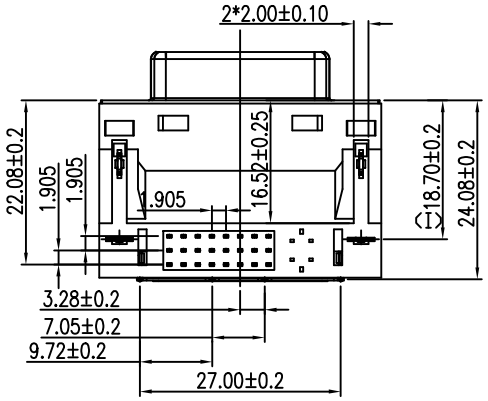

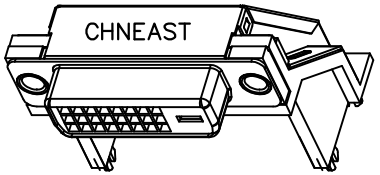

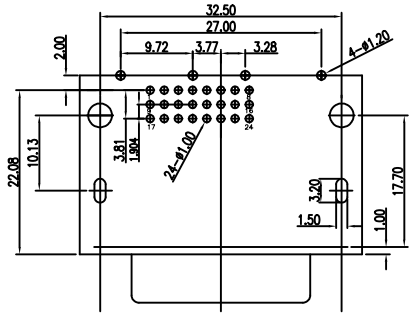

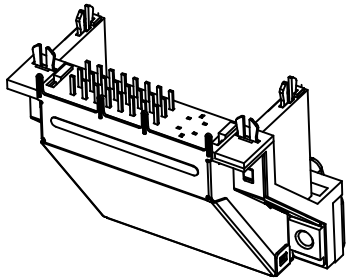

RECOMMENDED P.C.B. LAYOUT(P.C.B THICKNESS=1.6mm)

COMPONENT SIDE VIEW(TOLERANCE: ±0.05)

INSPECTION DIMENSION:(A)~(I)

NOTES

1. MATERIAL:
   Housing(UPPER):PBT, UL 94V-0, Color:Ivory.
   Connecting Pedestal:PBT, UL 94V-0, Color:Ivory.
   Terminal:Copper Alloy.
   Shell:SPCC.
   Shield:Stainless Steel.
   Boardlock:Copper Alloy.
   Bracket:Zinc Alloy.
2. FINISH:
   Terminal:Gold Plated over Nickel at Contact Area.
   Tin Plated over Nickel at Solder Ared.
   Shell:Nickel Plated.
   Boardlock:Tin Plated.
   Bracket:Nickel Plated.
3. This Product is LEAD-FREE & RoHS Compliance Product.

SPECIFICATIONS

1. DVI
1.1 Voltage: 40 VAC(RMS) Max.
1.2 Current Rating: 1.5 Ampere per Contact
1.3 Contact Resistance(UPPER): 30 Milliohms Max.
1.4 Insulation Resistance: 1000 Megohms Min.
1.5 Dielectric Withstanding Voltage: 500V DC(RMS)
1.6 Total Mating Force: 4.5 Kgf Max.
1.7 Total Unmating Force: 1.0 Kgf Min.
1.8 Operating Temperature: -55°C to +85°C

EAST-DVID24PHX11X1AR

塑胶颜色:
W:白色
B:黑色

螺丝:
1:锁螺丝4.80
2:无螺丝
3:附螺丝
4:锁螺丝5.80

TOLERANCES UNLESS OTHERWISE SPECIFIED: X. --- X.X ± 0.38 X.XX ± 0.25 X.XXX ± 0.20 Angle ±3°	COSTOMER COPY	深圳市东方御业科技有限公司 TEL:0755-27155560 WWW.DFYYCONN.COM	
	DRAWN: Qinkx	2017/09/10	TITAL: DVI-D 24P中心高H25.36全屏蔽壳 四脚鱼叉定位 (RoHS)
	CHECKED: Chenl	2017/09/10	PART NO: EAST-DVID24PHX11X1AR
THESE DRAWING AND SPCIFICATION ARE THE PROPERTY OF Shenzhen Dongfangyuye ELECTRONIC CO., LTD.. SHALL NOT BE REPRODUCED.	APPROVED: Chenl	2017/09/10	UNIT: mm / SCALE: N/A / SHEEL: / REV.

www.dfyyconn.com