REV.	ECN NO.	MODIFY MATTER	DATE	APPROVED
A		RELEASE TO PRODUCTION		

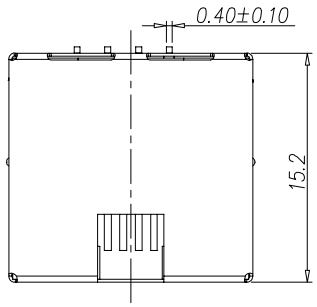

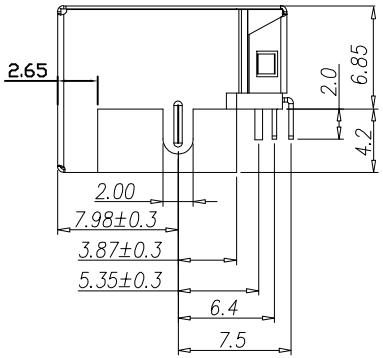

SPECIFICATIONS:

1. RJ Electrical Characteristics
   - 1-1: Voltage: 150V AC RMS
   - 1-2: Current Rating: 1.5A
   - 1-3: Contact Resistance: 40mΩ MAX.
   - 1-4: Insulation Resistance: 500MΩ MIN.
   - 1-5: Dielectric Withstang Voltage :1000V AC
   - 1-6: Operature Temperature: -40℃~80℃

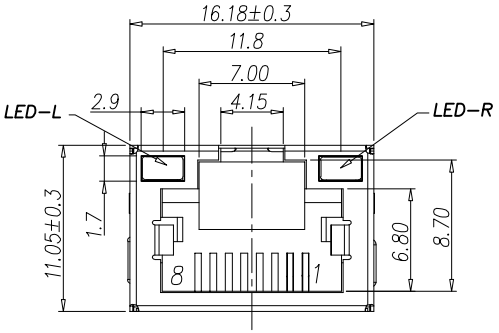

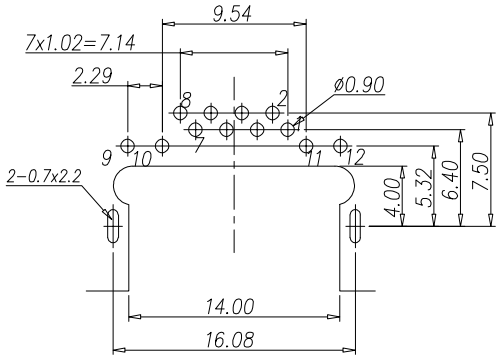

Recommend PCB Layout
(Jack Top View)
Tolerance: ±0.05mm

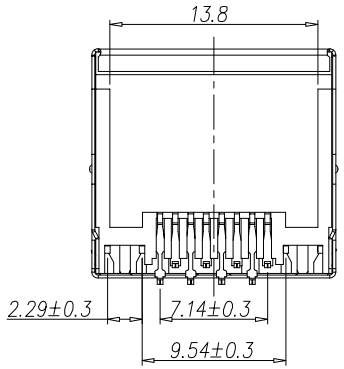

EAST-B011-420X1-P

X	Color	housing Material
B	Black	LCP UL94V-0
O	Orange(151C)	PA9T UL94V-0
Y	Yellow(130C)	PA9T UL94V-0

X	Terminal Plating
0	Au 1u" Plating
1	Au 3u" Plating
2	Au 6u" Plating
3	Au 15u" Plating
4	Au 30u" Plating
5	Au 50u" Plating

Table3

X	包装方式
C	卷带包装
P	吸塑盒包装

X	LED-L	LED-R
1	GREEN	YELLOW
2	YELLOW	GREEN
3	YELLOW	YELLOW/GREEN
4	GREEN	YELLOW/GREEN
5	YELLOW/GREEN	YELLOW
6	YELLOW/GREEN	GREEN

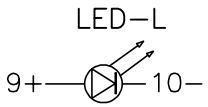

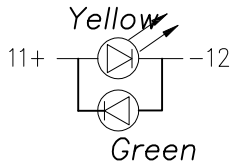

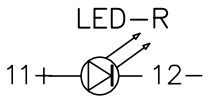

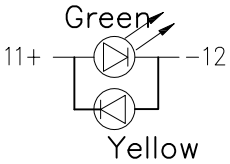

TOLERANCES UNLESS OTHERWISE SPECIFIED:	
X.	---
X.X	± 0.38
X.XX	± 0.25
X.XXX	± 0.10
Angle	±1°

THESE DRAWING AND SPCIFICATION ARE THE PROPERTY OF Shenzhen Dongfangyuye ELECTRONIC CO., LTD.. SHALL NOT BE REPRODUCED.

COSTOMER COPY

深圳市东方御业科技有限公司
WWW.DFYYCONN.COM TEL:0755-27155560

DRAWN: CHENLEI	2017/09/10	TITAL: RJ45 H6.85mm DIP LED (RoHS)
CHECKED: CHENLEI	2017/09/10	PART NO: EAST-B011-420X1-P; DRAWING NO:
APPROVED: QINKAIXING	2017/09/10	UNIT: mm; SCALE: N/A; SHEEL: 1:1; REV.